Set-B

BRAC UNIVERSITY Inspiring Excellence	**BRAC University** **Department of Computer Science and Engineering** Semester: **Fall 2025** Course Code: **CSE460** Course Title: **VLSI Design**	**Final Examination** Full Marks: **15 x 2 + 10 = 40** Time: **1 hour 45 minutes** Date: **10 January 2026**

Student ID:	**Name:**	**Section:**

[Question 1, Question 2 and Question 3 are mandatory. Question 4 is a bonus question.
Return the question paper with the answer script.]

Question 1: [CO4]

Scenario 1:

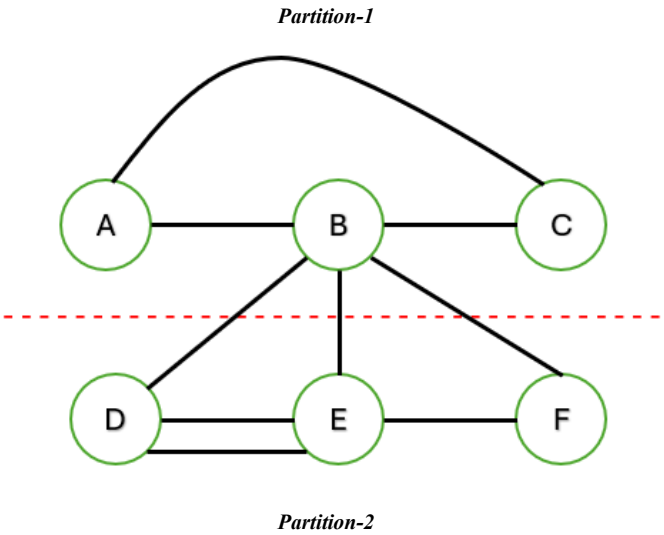

Fig.1

For question **(a)** and **(b)**, an initial cut for the partition of 6 circuit elements, A, B, C, D, E, and F are given in **Fig.1** the cut lines divide the circuit elements into two partitions, **Partition-1** and **Partition-2**

Scenario 2:
For question **(c),** you are given a chip layout where you have 2 distinct sources and 2 distinct targets. You have to reach **T1** from **S1** and **T2** from **S2**. The Lee Maze algorithm is an algorithm for signal routing, which uses a sequential approach.

Here, **X** is an obstacle for signal routing.

				X					
			S1				T2		
					X				
							T1		
					X				
				S2					
			X	X					

				X					
			S1				T2		
					X				
							T1		
					X				
				S2					
			X	X					

				X					
			S1				T2		
					X				
							T1		
					X				
				S2					
			X	X					

				X					
			S1				T2		
					X				
							T1		
					X				
				S2					
			X	X					

(a)	**Find** the **initial Cut Cost** and the **cost** of moving each node.	[3]
(b)	i) **Write** down all the possible **gains** for the possible swaps in the first iteration and find the maximum gain in that iteration, ii) **Swap** the appropriate nodes and draw the updated partition graph. iii) **Find** the new cut cost and **justify** its value using the gain in the first iteration.	[4]
(c)	Using the Lee Maze algorithm, find the **shortest path** from S1 to T1 and from S2 to T2. Is there any chance for **multiple answers**? If so, which one is **better**? **Justify** your statement. [**Hints**: Refer to Lee Maze as a sequential approach] [**N.B**- Use the top two and bottom two boxes for the different cases. Complete all iterations for each source in one single box, and then back propagate and dictate the new metal connection in that box]	[8]

Question 2: [CO3]

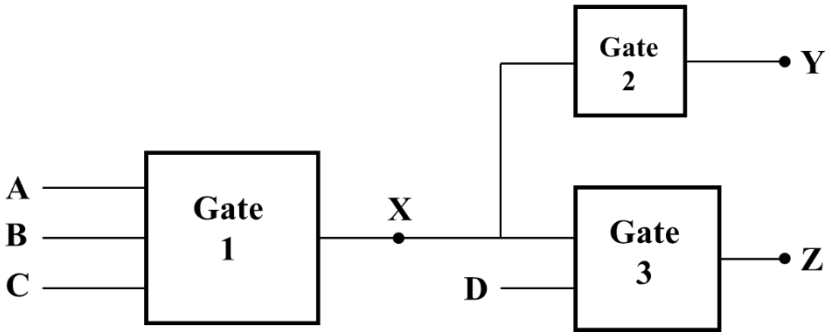

Fig. 2

The block diagram shown in Fig. 2 represents a fault detection and protection system used in an industrial machine. Three fault related conditions are monitored as the inputs of the system:

- **A** = Emergency stop activated (1 = activated, 0 = deactivated)
- **B** = Over-temperature detected (1 = detected, 0 = not detected)
- **C** = Power supply failure (1 = failure, 0 = not failure)

When **one or more of the faults are detected**, **Gate 1** produces a **LOW** value at node **X**.
The signal at node X is used in two ways:

1. The low value at X is processed by **Gate 2** to generate an **enable signal (Y=1)** that triggers an alarm to indicate fault detection.
2. X is combined with an independent **safety switch (D,** 1 = switch engaged**)** to generate a **shutdown signal (Z)**. No shutdown occurs **(Z=0)** when
   - No fault is detected (X=1)
   - **and**, the safety switch is properly engaged (D=1)

The designer decided to implement the system with CMOS logic using a material where $\boldsymbol{\mu_n = 4\mu_p}$.

(a)	**Identify** Gate 1, Gate 2 and Gate 3.	[3]
(b)	**Draw** the simplified RC circuit of Gate 1. [Choose widths of PMOS and NMOS transistors to achieve worst-case effective rise and fall resistance equal to that of **a unit inverter (R)]**	[4]
(c)	**Determine** the total capacitance at node X.	[5]
(d)	**Derive** the expression for **propagation delay rise** (t_{pdr}) and **contamination delay fall** (t_{cdf}) at node X.	[3]

Question 3: [CO3]

Suppose you are designing a chip using a **0.9V, 20 nm** technology that consists of **500 million transistors**, of which **25% are used to build logic gates**, while the remaining transistors are used in **memory arrays**. The average width of a logic transistor is 6λ, and the average width of a memory transistor is 3λ. The chip occupies an area of 90 mm^2

The gate capacitance and diffusion capacitance are 0.05 fF/μm and 0.36 fF/μm, respectively, for the entire chip. Neglect wire capacitances. The operating **clock frequency** is 2 GHz.

During every **100 clock cycles,** the logic transistors experience 9 switching events, while the memory transistors experience 15 switching events. Total **short circuit power** consumption is 0.3W.

You also obtain the following current data for each transistor:

- Gate leakage current = 6 nA/µm
- Junction leakage current = 2 nA/µm
- Subthreshold leakage current = 1 nA/µm

The acceptable total power consumption of the chip is 5 W.

(a)	Find the **activity factor** and **switching frequency** of the **logic gates** and the **memory arrays**.	[2]
(b)	**Estimate** the **dynamic power** and **static power** of the chip.	[6]
(c)	**Calculate** the **total power consumption.** Is the **total power consumption** within the acceptable range?	[2]

<u>Question 4:</u> [Bonus]

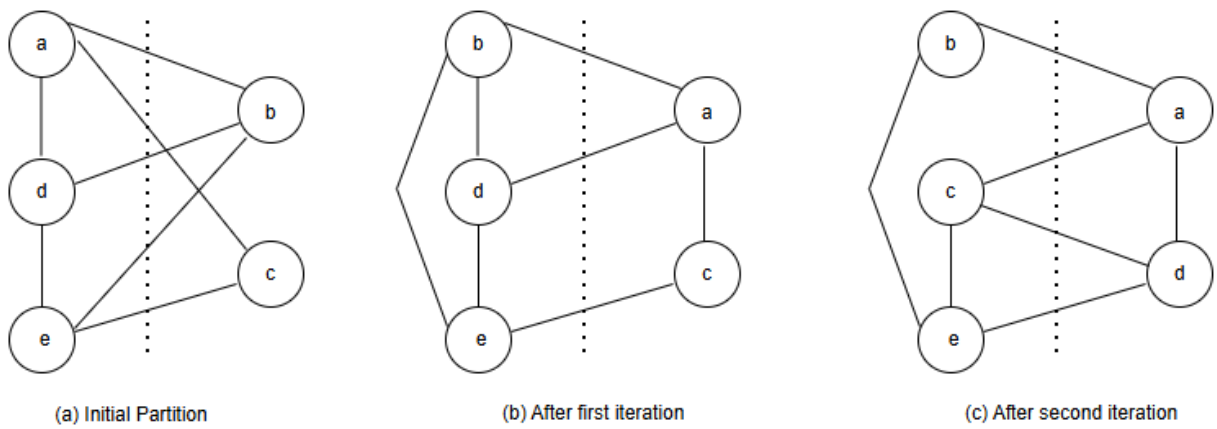

Fig. 3

(a)	From the scenario, identify if we need a 3rd iteration, if yes, perform the 3rd iteration, draw the new graph, and calculate the new cut cost.	[2]
(b)	You need to design a CMOS circuit to implement the logic function $Y = \overline{AB + C}$ such that the worst case effective rise and fall resistance is equal to that of a unit inverter. **Calculate** the value of **Kp** and **Kn** for **each transistor** in this circuit. (**Hint**: The resistance of the **two parallel paths** must be the **same**).	[2]